CHIPSID

CHIP SID SHOW - 19/06/2019 - Episode 12

Max Hall on Radio Free Matlock

CHIPSID

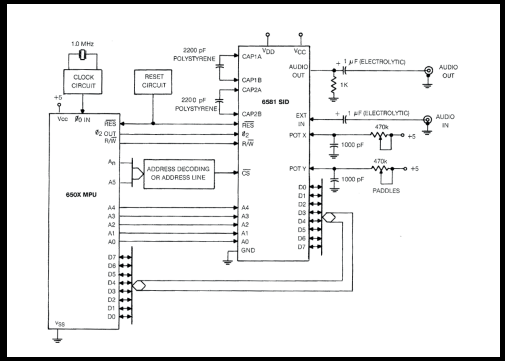

CHIP SID SHOW - 19/06/2019
Episode 12

CHIPSID

CHIP SID SHOW - 19/06/2019
Episode 12

Glenn R Gallefoss	Disco Robotski	2014	4:39
AceMan (Jakub Szeląg)	Shine Me To The Moon	2019	1:42
Tracker (Wojciech Wojtkiewicz)	Music Is Playing Behind Garage Door	2019	3:13
Hans-Peter Fischer (Raze)	Torn Apart	2000	2:43
Jay Hammer (Desire)	Dropkick	2018	2:21
Glenn R Gallefoss	Magnetic Fields	2019	2:38
Randall (Michał Hoffmann)	Jebane Dziadostwo	2019	3:00
Roc / Stinsen / Zardax	Crossing Over	2019	6:20
LMan (Markus Klein)	Mo's Techno Logy	2018	4:14
LMan (Markus Klein)	Venus Falling	2017	4:38
Jeroen Kimmel (Red)	Think Twice III	1987	3:50
MCH (Michal Brzeski)	A Piece of Moldy Cheese	2019	2:28
Psycho8580 (Marcin Majdzik)	Pierce The Gravity	2019	2:51
Spider Jerusalem (Jan Rödig)	Rabbit Punch Fever	2018	5:16
Willi (Dirk Wilberg)	Turritune	2017	1:56
Feekzoid (Paul Hannay)	Inspiration (Amiga)	2017	1:35
Søren Lund	Complex Title	1993	4:00
Søren Lund	8th Frame	1992	3:40

1:01:04

Max Hall on Radio Free Matlock